Centre Number	Candidate Number	Name

UNIVERSITY OF CAMBRIDGE INTERNATIONAL EXAMINATIONS
General Certificate of Education
Advanced Subsidiary Level and Advanced Level

PHYSICS **9702/03**

Paper 3 Practical Test

May/June 2004

1 hour 15 minutes

Candidates answer on the Question Paper.
Additional Materials: As specified in the Confidential Instructions.

READ THESE INSTRUCTIONS FIRST

Write your Centre number, candidate number and name on all the work you hand in.
Write in dark blue or black pen in the spaces provided on the Question Paper.
You may use a soft pencil for any diagrams, graphs or rough working.
Do not use staples, paper clips, highlighters, glue or correction fluid.

Answer the **one** question.

You are expected to record all your observations as soon as these observations are made, and to plan the presentation of the records so that it is not necessary to make a fair copy of them. The working of the answers is to be handed in.
Marks are mainly given for a clear record of the observations actually made, for their suitability and accuracy, and for the use made of them.
Additional answer paper and graph paper should be submitted only if it becomes necessary to do so.
You are reminded of the need for good English and clear presentation in your answers.

At the end of the examination, fasten all your work securely together.

If you have been given a label, look at the details. If any details are incorrect or missing, please fill in your correct details in the space given at the top of this page.

Stick your personal label here, if provided.

For Examiner's Use

This document consists of **8** printed pages.

© UCLES 2004

1 In this question you will determine the density of water by immersing a mass suspended by a spring into a beaker of water.

(a) (i) Set up the apparatus as shown in Fig.1.1. The pointers A and B should be attached to each end of the spring. The pointer A should also be attached to the paper clip. The pointer B should be attached to the mass holder. The total mass of the holder and the masses should be 200 g.

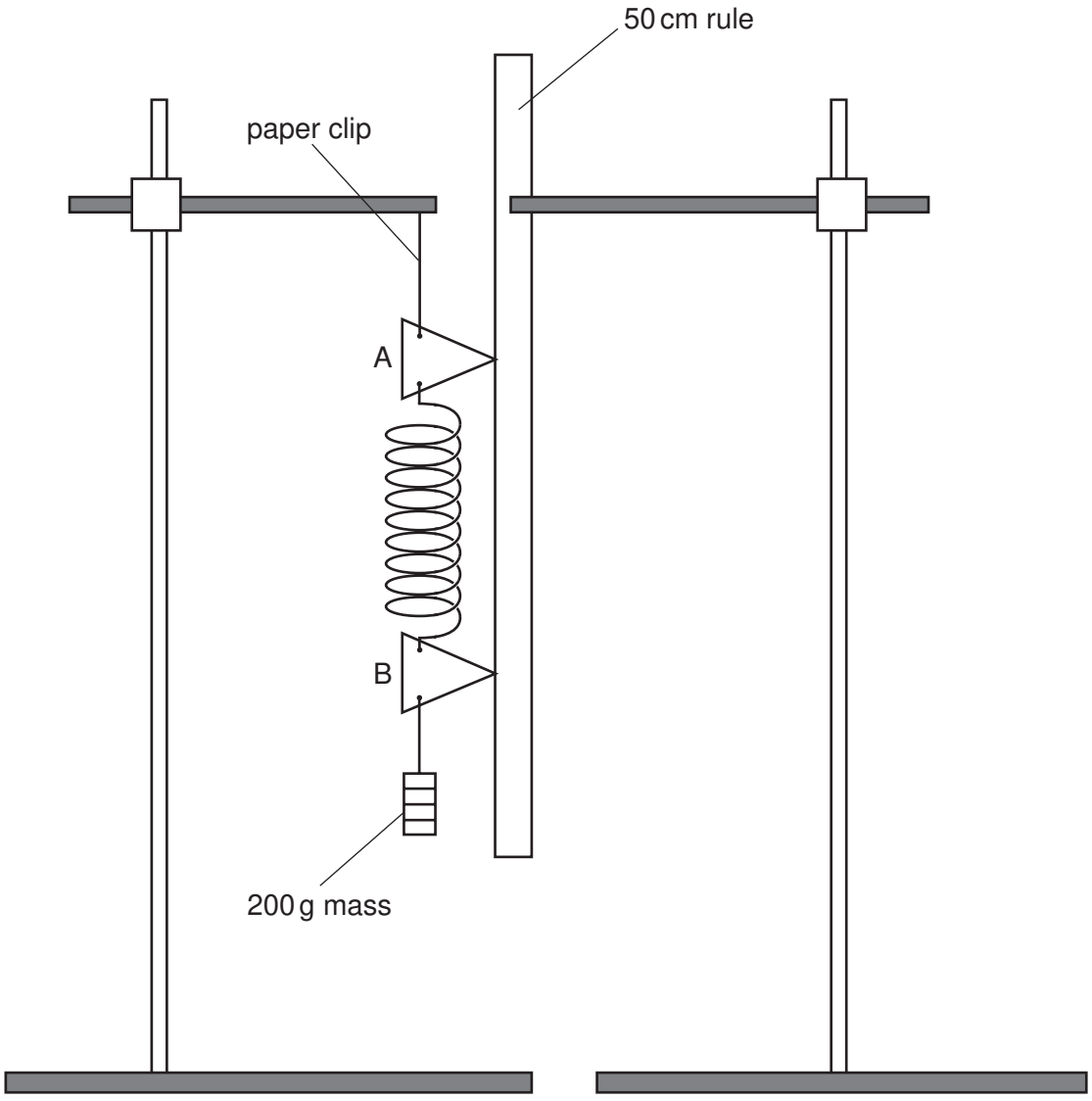

Fig. 1.1

(ii) Record the reading from pointer B.

reading from pointer B = ... m

(iii) Add a further mass of 100 g (0.98 N weight) to the mass holder and record the new reading from pointer B.

new reading from pointer B = ... m

(iv) Hence determine the extension of the spring when an additional force of 0.98 N is applied to the spring.

extension = ... m

(b) Hooke's law can be expressed in the form

$$F = kx,$$

where F is the force required to produce an extension x, and k is the spring constant.

Use your answers from **(a)** to determine a value for k. You may assume that the spring obeys Hooke's law.

k = ... $\mathrm{N\,m^{-1}}$

© UCLES 2004

For Examiner's Use

(c) (i) Use the vernier callipers to measure the diameter of one of the masses.

diameter = ... m

(ii) Determine the percentage uncertainty in the measurement of the diameter of the mass.

percentage uncertainty = ...

(iii) Calculate the cross-sectional area A, in m^2, of the mass. Ignore the slot that is cut into the mass.

A = ... m^2

© UCLES 2004

(d) (i) Put all of the masses onto the mass holder so that the spring supports a total mass of 300 g. This mass should remain constant for the rest of the experiment. Record the readings from the pointers A and B and hence calculate a value for the length l between the pointers.

reading from pointer A = ... m

reading from pointer B = ... m

l = ... m

(ii) Place a beaker of water under the mass as shown in Fig. 1.2. Adjust the position of the boss so that part of the mass is immersed in the water as shown in Fig. 1.2.

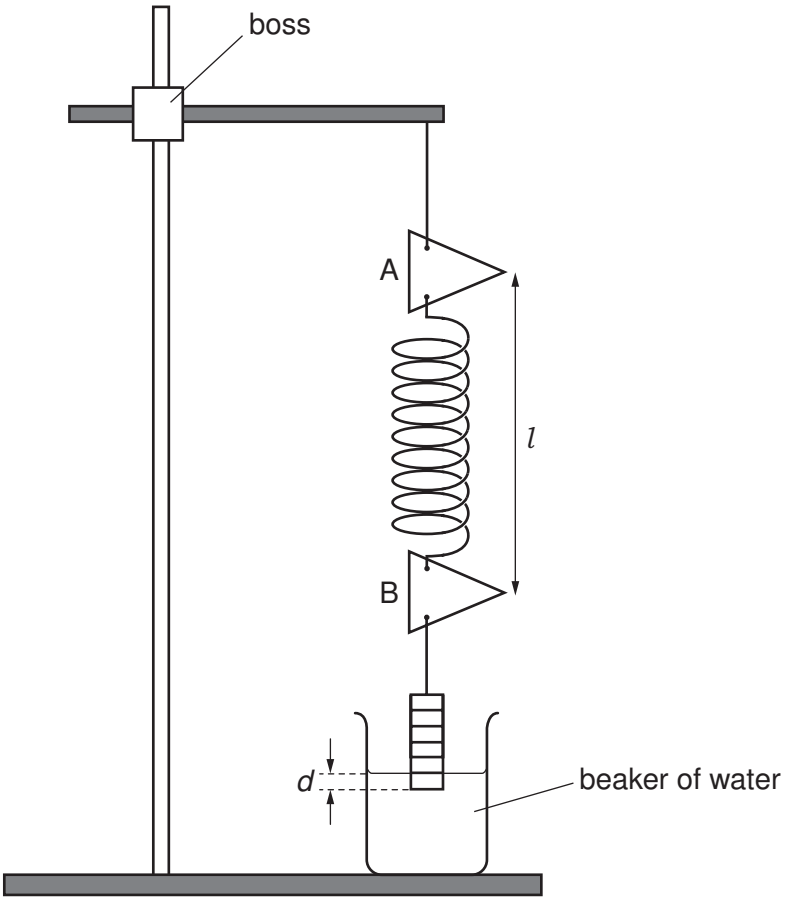

Fig. 1.2

(iii) Make and record measurements to determine the depth d of the submerged part of the mass and the length l between the pointers.

d = ... m

l = ... m

For Examiner's Use

(iv) Adjust the position of the boss and repeat **(iii)** until you have six sets of readings for d and l. Record all your readings in a table in the space below.

(e) (i) Plot a graph of l (y-axis) against d (x-axis).

(ii) Draw the line of best fit.

(iii) Determine the gradient of this line.

gradient = ...

© UCLES 2004

For Examiner's Use

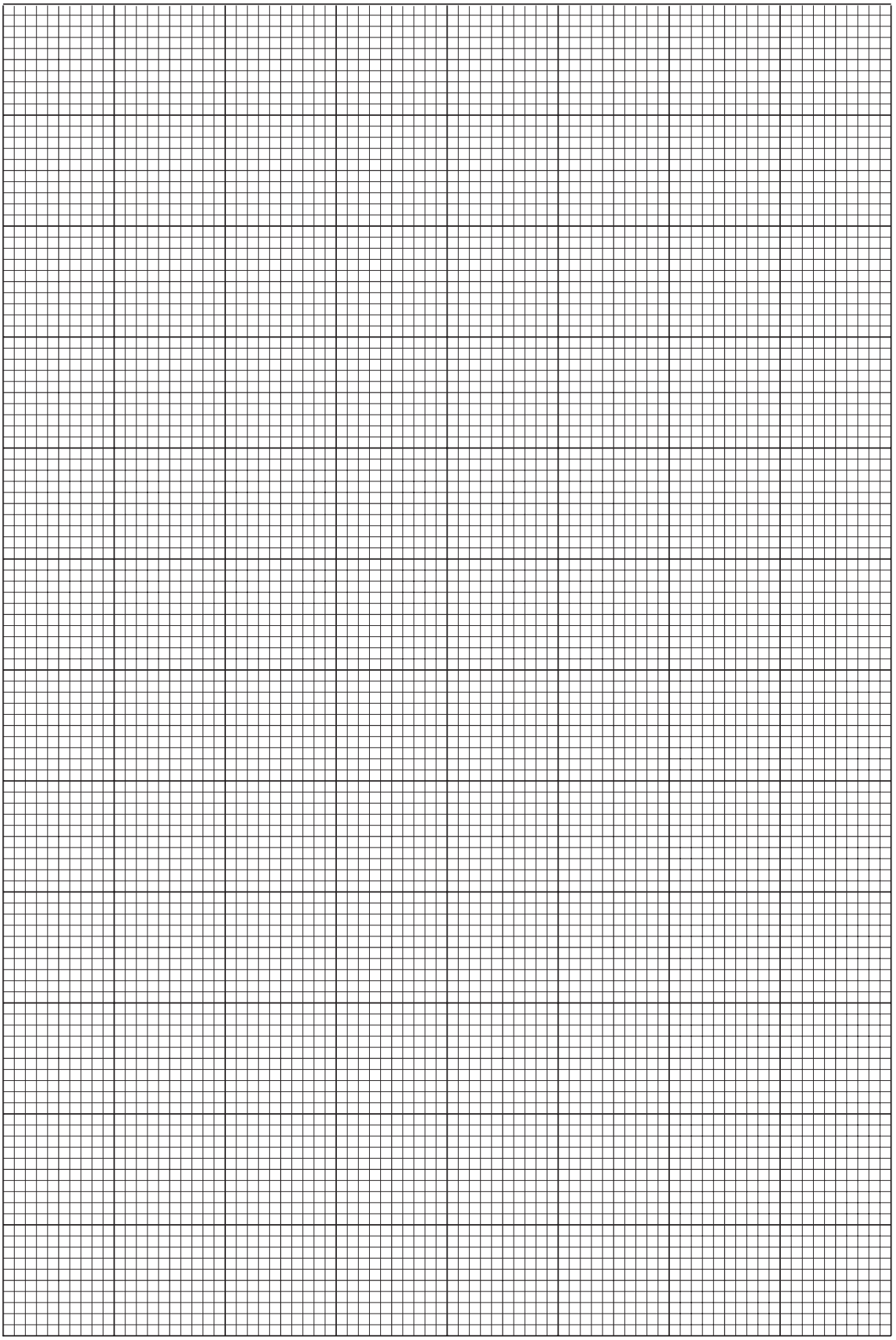

For Examiner's Use

(f) Theory suggests that l and d are related by the equation

$$l = \frac{-\rho_w Agd}{k} + c$$

where ρ_w is the density of water, g is the acceleration of free fall and c is a constant. You may assume that $g = 9.8\,\text{m s}^{-2}$.

Use your answer from **(e)(iii)** together with the values of A, g and k to determine a value for the density of water.

ρ_w = ...

(g) An accurate measurement of d is not possible with the apparatus that has been supplied. State one difficulty that you had when making this measurement, and suggest one improvement that you would make if additional materials were available.

difficulty .....

.....

.....

.....

improvement .....

.....

.....

.....

University of Cambridge International Examinations is part of the University of Cambridge Local Examinations Syndicate (UCLES), which is itself a department of the University of Cambridge.

© UCLES 2004